Client: Southern California Gas		Field: Aliso Canyon Storage Pool
Well: Porter # 35	Top Depth: 5797.5'	Country: Los Angeles
Date: 02/26/2016	Bottom Depth: 7829.4'	Tool Type: Image Caliper
Analyst: R. Pestana	Run#: 1	.
Pipe: 7"	# Fingers: 56 F	.

The following parameters were used for this analysis:

OD=7", ID=6.276", Weight=26 lb/ft and Wall thickness 0.362" from 5797.5' to 6618'
OD=7", ID=6.184", Weight=29 lb/ft and Wall thickness 0.408" from 6618' to 7829.4'

There are some joints with isolated pitting within the them. Joint # 183 graded class 2 with depth of penetration (DOP) of 24.63 % at 7718.28 ft and joint # 184 graded class 1 with DOP of 16.09% at 7748.78 ft. All other instances of pitting grade in the class 1 range.

Deformation/Ovality are presented in some joints, the more significant was in the joint #155 with percent out-of-roundness of 23.51% percent out-of-roundness. See Joints #147, #155 and #156 as examples. The percent outofroundness does not necessarily mean metal "loss" but quite possibly only metal "moved". Percent outofroundness in the joints containing deformation/ovality will be represented at a higher value because of the magnitude of deflection of the maximum finger away from the nominal ID. See further description below on deformation/ovality.

Note that the collar connection doesn't have a common signature. The collars shows a circumferential feature above and below the connection that in our opinion these responses could be possible mechanical or man-made features created during the makeup of the casing and not appear to be corrosion related.

Deformation & Ovality:

The terms "deformation & ovality" are used to describe tubulars that are out of round. When encountering issues of this nature during the analysis the evaluation software reports it as "damage" because there is a change from the nominal ID that indicates metal loss. The reported magnitude (% Ovality) is based on the percent of measured wall loss relative to the wall thickness. It is our opinion, that when encountering this type of damage there is most often no actual metal loss as is reported during the analysis by the software. The software looks for changes from nominal ID, thus ovality or "egg shaped" casing results in a change from nominal ID (in both the minimum and maximum) and forces the reporting as such. It is our opinion that even though there is usually no metal loss associated with this type of
damage it should be left in the report to serve as an identifier to the operator, that there could be an issue with the pipe and should be monitored.

Note: (below is just a precautionary statement to the operator and cannot be proved or disproved by the data set obtained by this service as it is outside the scope of said service). A feature of this type is from a mechanical mechanism and not corrosion based in our opinion. One exception is when this type of feature occurs at the coupling. Occurring at the coupling could pose an issue for the operator in the form of a leaking tubular connection

Client: Southern California Gas		Field: Aliso Canyon Storage Pool
Well: Porter # 35	Top Depth: 5797.5'	Country: Los Angeles
Date: 02/26/2016	Bottom Depth: 7829.4'	Tool Type: Image Caliper
Analyst: R. Pestana	Run#: 1	.
Pipe: 7"	# Fingers: 56 F	.

DISCLAIMER:

These results were generated semi-automatically, using EPIDOTE- MIPS analysis software. The data was acquired using Hotwell casing inspection tools. HotWell accepts no responsibility for the accuracy of the results that are presented.

All interpretations are opinions, based on inferences from electrical or other measurements and we cannot and do not guarantee the accuracy or correctness of any interpretation, and we shall not, except in the case of gross or willful negligence on our part, be liable or responsible for any loss, costs, damages or expenses incurred or sustained by anyone resulting from any interpretations made by any of our officers, agents or employees. These interpretations are also subject to our general terms and conditions.

Client: Southern California Gas
Well: Porter # 35
Date: 02/26/2016
Analyst: R. Pestana
Pipe: 7"

Top Depth: 5797.5'
Bottom Depth: 7829.4'
Run#: 1
Fingers: 56 F

Field: Aliso Canyon Storage Pool
Country: Los Angeles
Tool Type: Image Caliper
.
.

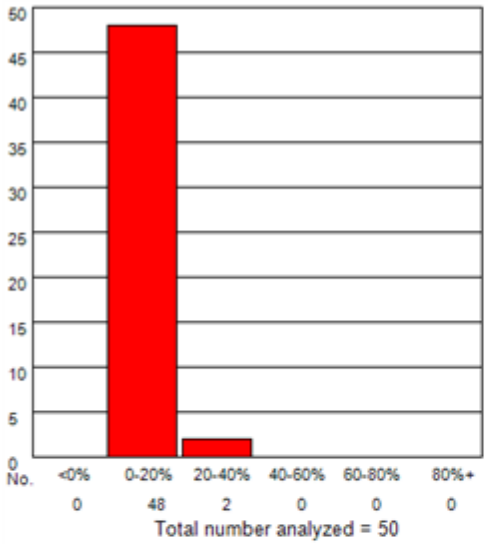

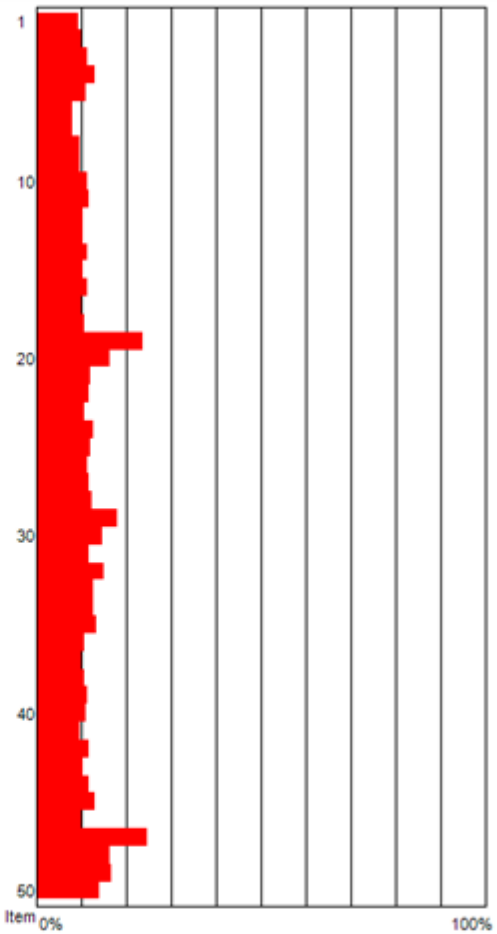

Maximum Penetration (%)

Client: Southern California Gas
Well: Porter # 35
Date: 02/26/2016
Analyst: R. Pestana
Pipe: 7"

Top Depth: 5797.5'
Bottom Depth: 7829.4'
Run#: 1
Fingers: 56 F

Field: Aliso Canyon Storage Pool
Country: Los Angeles
Tool Type: Image Caliper
.
.

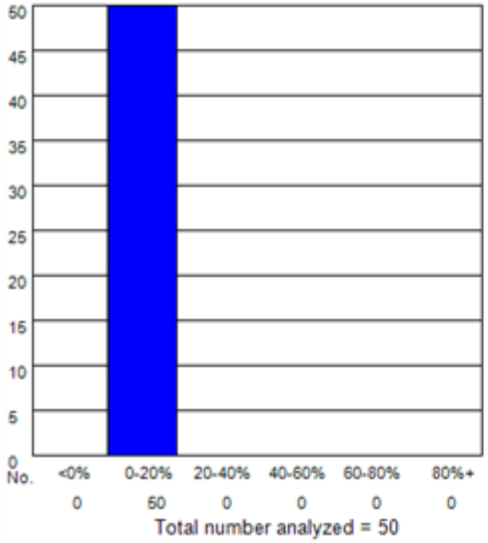

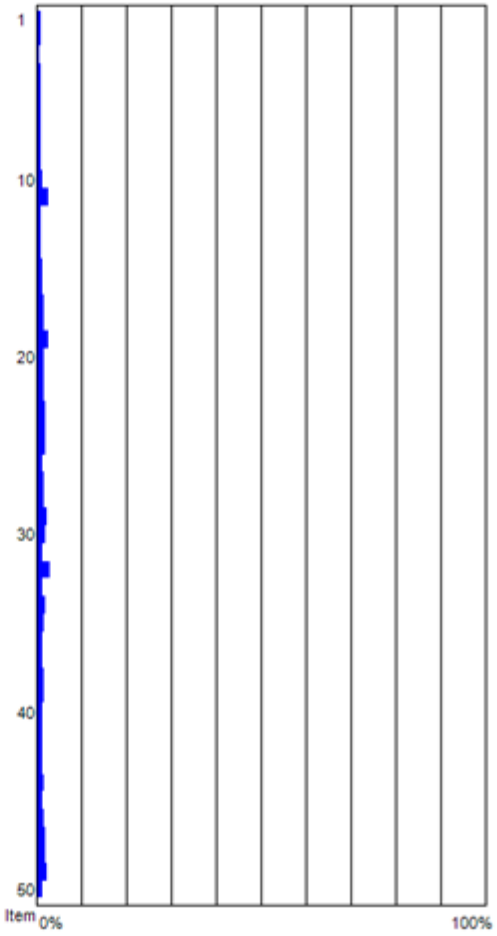

Maximum Projection - Based on Wall Thickness

Client: Southern California Gas
Well: Porter # 35
Date: 02/26/2016
Analyst: R. Pestana
Pipe: 7"

Top Depth: 5797.5'
Bottom Depth: 7829.4'
Run#: 1
Fingers: 56 F

Field: Aliso Canyon Storage Pool
Country: Los Angeles
Tool Type: Image Caliper
.
.

Penetration Tally Min Wall

Extended Joint Body Penetration - MIPS JointAnalysisX v2.48 - Joint statistics based on joint Median ID

Less than 0	From 0 to 20	From 20 to 40	From 40 to 60	From 60 to 80	Greater than 80
Null	Class 1	Class 2	Class 3	Class 4	Class 5

Pipe grading based on Max Percentage Penetration

Item Number	Top Body	Body Length	NomID At Max Pen	Mean Median Ins	Max Pen Ins	Max Pen %	Max Pen Depth	Min Wall Ins	Max Loss %	Min Diam Ins	Comments
137	5797.562	12.262	6.276	6.246	6.314	9.021	5799.592	0.343	3.971	6.207	Class 1
138	5813.101	38.364	6.276	6.264	6.337	9.887	5813.778	0.332	2.252	6.213	Class 1
139	5854.743	39.578	6.276	6.248	6.332	11.194	5870.891	0.334	3.907	6.212	Class 1
140	5897.720	40.913	6.276	6.252	6.347	12.722	5913.334	0.326	3.784	6.210	Class 1
141	5941.911	38.971	6.276	6.262	6.341	10.696	5966.258	0.329	2.319	6.207	Class 1
142	5984.523	39.578	6.276	6.265	6.322	7.785	5990.667	0.339	2.449	6.210	Class 1
143	6027.986	37.514	6.276	6.246	6.305	7.886	6028.014	0.348	3.949	6.208	Class 1
144	6069.263	38.242	6.276	6.259	6.329	9.474	6071.068	0.336	2.546	6.200	Class 1
145	6110.419	39.942	6.276	6.267	6.336	9.369	6150.361	0.332	1.940	6.225	Class 1
146	6153.518	38.485	6.276	6.285	6.365	11.153	6165.569	0.318	1.760	6.227	Class 1
147	6195.766	39.820	6.276	6.249	6.335	11.435	6199.507	0.332	3.996	6.135	Class 1-Deformation/Ovality
148	6239.107	38.364	6.276	6.270	6.344	10.143	6273.318	0.328	2.110	6.226	Class 1
149	6280.992	38.849	6.276	6.251	6.328	10.284	6290.898	0.336	3.478	6.213	Class 1
150	6323.361	39.820	6.276	6.240	6.325	11.154	6356.758	0.338	4.740	6.196	Class 1
151	6366.096	40.427	6.276	6.269	6.344	10.237	6405.933	0.328	1.887	6.203	Class 1

Client: Southern California Gas
Well: Porter # 35
Date: 02/26/2016
Analyst: R. Pestana
Pipe: 7"

Top Depth: 5797.5'
Bottom Depth: 7829.4'
Run#: 1
Fingers: 56 F

Field: Aliso Canyon Storage Pool
Country: Los Angeles
Tool Type: Image Caliper
.
.

Item Number	Top Body	Body Length	NomID At Max Pen	Mean Median Ins	Max Pen Ins	Max Pen %	Max Pen Depth	Min Wall Ins	Max Loss %	Min Diam Ins	Comments
152	6409.680	41.277	6.276	6.263	6.345	11.138	6422.816	0.328	2.419	6.211	Class 1
153	6454.113	39.820	6.276	6.255	6.328	9.765	6493.362	0.336	2.956	6.182	Class 1
154	6496.847	37.635	6.276	6.282	6.358	10.531	6506.412	0.321	1.576	6.205	Class 1
155	6537.761	38.728	6.276	6.247	6.424	23.513	6574.003	0.288	6.510	6.102	Class 2 -Deformation/Ovality
156	6579.159	38.121	6.276	6.286	6.402	16.234	6608.566	0.299	2.700	6.197	Class 1- Deformation/Ovality
157	6620.194	40.063	6.184	6.197	6.292	11.852	6629.341	0.354	1.288	6.107	Class 1- Light Pitting
158	6662.685	34.843	6.184	6.216	6.306	11.531	6671.941	0.347	0.904	6.119	Class 1
159	6700.563	33.872	6.184	6.243	6.322	10.381	6718.772	0.339	2.259	6.136	Class 1
160	6736.984	35.693	6.184	6.211	6.310	12.585	6749.601	0.345	2.874	6.106	Class 1
161	6775.469	32.415	6.184	6.188	6.285	11.922	6776.794	0.358	2.049	6.089	Class 1
162	6810.798	39.942	6.184	6.165	6.258	11.117	6835.212	0.371	3.392	6.096	Class 1
163	6853.168	40.670	6.184	6.215	6.306	11.644	6867.901	0.347	1.536	6.136	Class 1
164	6897.480	39.335	6.184	6.201	6.297	12.000	6924.445	0.352	1.780	6.107	Class 1
165	6939.971	40.427	6.184	6.215	6.354	17.703	6962.714	0.323	2.854	6.102	Class 1 -Deformation/Ovality
166	6983.677	40.306	6.184	6.222	6.334	14.372	6998.158	0.333	1.565	6.128	Class 1
167	7026.654	40.185	6.184	6.200	6.291	11.375	7044.421	0.355	1.174	6.133	Class 1
168	7069.266	38.971	6.184	6.197	6.317	14.939	7081.923	0.342	1.759	6.017	Class 1- Deformation/Ovality
169	7111.151	37.635	6.184	6.197	6.296	12.351	7116.614	0.352	1.773	6.134	Class 1
170	7151.942	40.427	6.184	6.183	6.284	12.401	7188.139	0.358	2.292	6.074	Class 1
171	7195.405	40.427	6.184	6.174	6.284	13.273	7198.676	0.358	2.715	6.094	Class 1
172	7238.867	30.472	6.184	6.231	6.313	10.659	7261.212	0.343	1.731	6.168	Class 1
173	7272.739	41.520	6.184	6.156	6.239	9.877	7294.824	0.381	3.635	6.087	Class 1
174	7317.416	38.606	6.184	6.197	6.281	10.467	7342.167	0.359	1.545	6.115	Class 1
175	7358.450	41.399	6.184	6.194	6.283	11.028	7358.738	0.359	1.767	6.123	Class 1

Client: Southern California Gas
Well: Porter # 35
Date: 02/26/2016
Analyst: R. Pestana
Pipe: 7"

Top Depth: 5797.5'
Bottom Depth: 7829.4'
Run#: 1
Fingers: 56 F

Field: Aliso Canyon Storage Pool
Country: Los Angeles
Tool Type: Image Caliper
.
.

Item Number	Top Body	Body Length	NomID At Max Pen	Mean Median Ins	Max Pen Ins	Max Pen %	Max Pen Depth	Min Wall Ins	Max Loss %	Min Diam Ins	Comments
176	7403.248	39.578	6.184	6.208	6.294	10.871	7403.511	0.353	1.154	6.141	Class 1
177	7446.589	37.271	6.184	6.195	6.272	9.524	7459.501	0.364	1.710	6.127	Class 1
178	7486.531	39.456	6.184	6.205	6.296	11.427	7502.584	0.352	1.584	6.145	Class 1
179	7528.537	39.578	6.184	6.193	6.275	10.144	7564.042	0.362	1.767	6.131	Class 1
180	7570.664	40.427	6.184	6.208	6.299	11.498	7573.286	0.351	1.373	6.146	Class 1
181	7614.127	40.185	6.184	6.215	6.315	12.767	7640.409	0.342	0.921	6.141	Class 1- Isolated Pitting
182	7657.468	40.792	6.184	6.172	6.254	9.955	7662.292	0.373	2.738	6.076	Class 1
183	7700.930	40.427	6.184	6.196	6.394	24.632	7718.282	0.303	2.526	6.084	Class 2 - Isolated Pittings
184	7744.029	40.306	6.184	6.207	6.335	16.097	7748.784	0.332	2.176	6.104	Class 1- Isolated Pitting
185	7786.641	40.792	6.184	6.168	6.307	16.663	7809.148	0.346	4.711	6.041	Class 1- Deformation/Ovality
186	7829.497	13.961	6.184	6.216	6.324	13.737	7835.617	0.338	5.401	6.146	Class 1

Client: Southern California Gas		Field: Aliso Canyon Storage Pool
Well: Porter # 35	Top Depth: 5797.5'	Country: Los Angeles
Date: 02/26/2016	Bottom Depth: 7829.4'	Tool Type: Image Caliper
Analyst: R. Pestana	Run#: 1	.
Pipe: 7"	# Fingers: 56 F	.

Joint Analysis Statistics Definitions

Title	Units	Description	Formula
Item Number		The sequential pipe section number	
Top Body	ft/m	Processed measured depth of the top of the joint body	
Body Length	ft/m	Length of the joint body	
Mean Median Ins	ins	The mean average value of the median radius*2 over the body length.	Mean Median = Mean (Median (Arm radii *2))
Max Pen Ins	ins	Maximum twice radius in the joint.	Max pen = Max (radius*2)
Max Pen %	%	Maximum radius*2 in the pipe section expressed as a percentage relative to the difference between the joint Nominal OD and Median ID.	Max pen% = 100 * Max (Radius*2- NomID)/(NomOD-MedianID)
Max Pen Depth	ft/m	Depth of the maximum wall penetration in the joint	
Min Wall Ins	ins	Min Wall = Min (NomOD-Arm radii *2)/2	
NomID At Max Pen	ins	Nominal ID at the maximum radius depth	
Max Loss %	%	The maximum value of metal loss in the pipe expressed as the percentage areal loss of wall relative to the outer diameter and median inner diameter.	%age Wall Loss = (100/n) * Sum (Si^2 - ID^2)/(OD^2 - ID^2) where n is the number of caliper arms. Si is twice the radius measured by caliper arm i. ID is the Median ID of the pipe. Max loss% = Max (%age wall loss) in the pipe body
Min Diam Ins	ins	Smallest diameter in the joint measured across opposing arms.	Min Diam = Min(Arm [x] radius*2 + Arm [x+Narms/2] radius*2)/2

Client: Southern California Gas
Well: Porter # 35
Date: 02/26/2016
Analyst: R. Pestana
Pipe: 7"

Top Depth: 5797.5'
Bottom Depth: 7829.4'
Run#: 1
Fingers: 56 F

Field: Aliso Canyon Storage Pool
Country: Los Angeles
Tool Type: Image Caliper
.
.

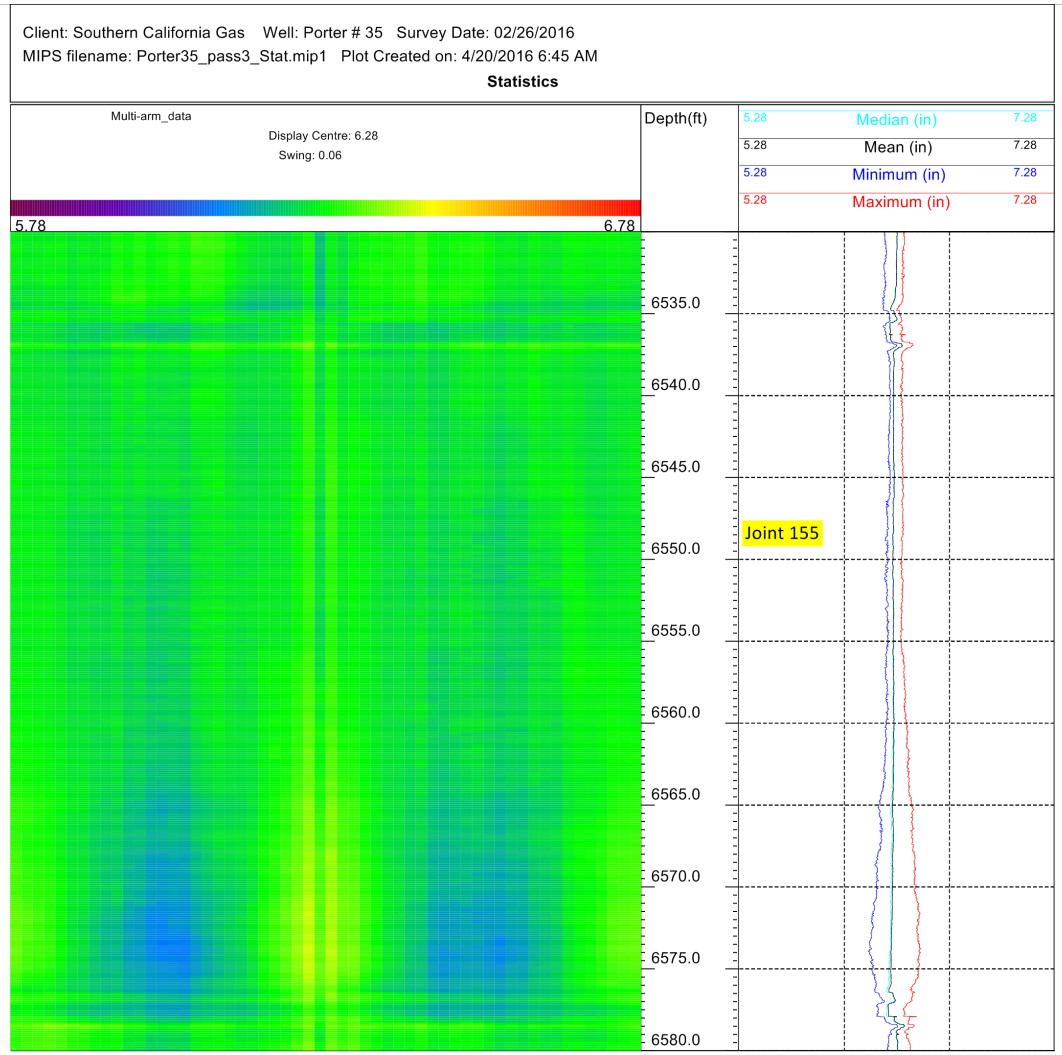

Deformation/Ovality - Joint # 155

Client: Southern California Gas
Well: Porter # 35
Date: 02/26/2016
Analyst: R. Pestana
Pipe: 7"

Top Depth: 5797.5'
Bottom Depth: 7829.4'
Run#: 1
Fingers: 56 F

Field: Aliso Canyon Storage Pool
Country: Los Angeles
Tool Type: Image Caliper
.
.

Porter35_pass3_Stat.mip1
Depth: 7718.282 (ft)
Arm Number: 20
Arm Value: 6.394 in

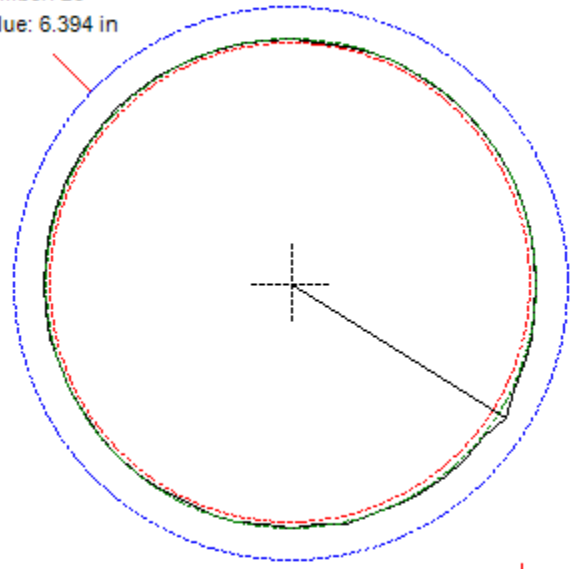

Drift ID: 6.059 in
Nominal ID: 6.184 in
Outer Diameter: 7 in

Radii*2:
Maximum: 6.394 in
Minimum: 6.142 in
Mean:6.198 in

Cross well diameters:
Maximum: 6.309 in
Direction arm: 20

Minimum: 6.143 in
Direction arm: 2

High Side

0.0 0.8 1.5 2.3 3.0 in

Max Penetration Joint #183 6.394ins 24.63%
based on joint Median ID

Porter35_pass3_Stat.mip1
Depth: 6574.003 (ft)
Arm Number: 27
Arm Value: 6.424 in

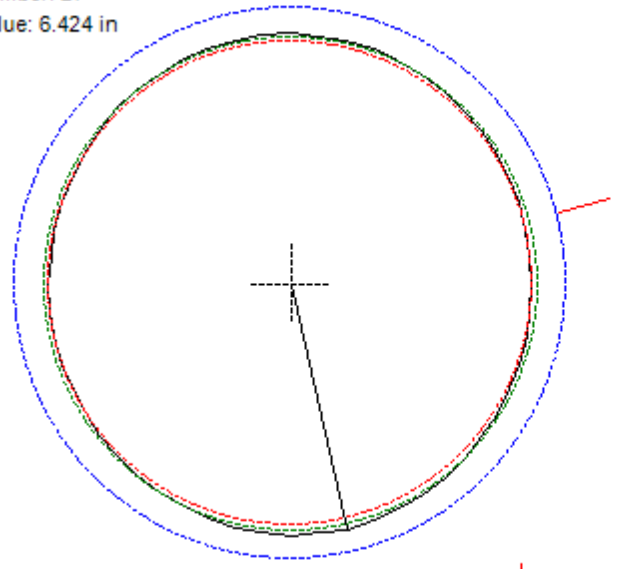

Drift ID: 6.151 in
Nominal ID: 6.276 in
Outer Diameter: 7 in

Radii*2:
Maximum: 6.424 in
Minimum: 6.104 in
Mean:6.236 in

Cross well diameters:
Maximum: 6.381 in
Direction arm: 27

Minimum: 6.114 in
Direction arm: 16

High Side

0.0 0.8 1.5 2.3 3.0 in

Max Penetration Joint #155 6.424ins 23.51%
based on joint Median ID

Client: Southern California Gas
Well: Porter # 35
Date: 02/26/2016
Analyst: R. Pestana
Pipe: 7"

Top Depth: 5797.5'
Bottom Depth: 7829.4'
Run#: 1
Fingers: 56 F

Field: Aliso Canyon Storage Pool
Country: Los Angeles
Tool Type: Image Caliper
.
.

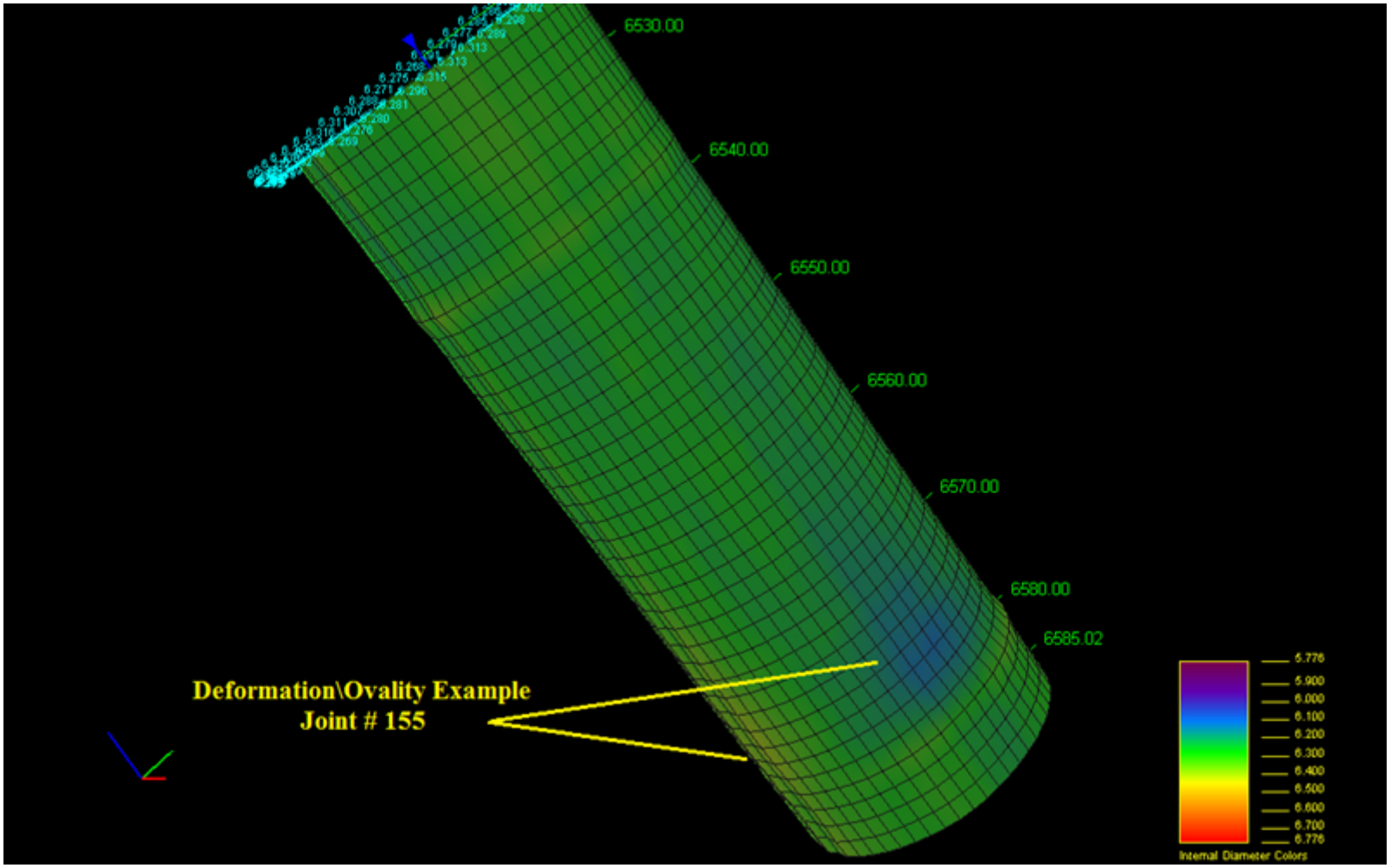

Client: Southern California Gas
Well: Porter # 35
Date: 02/26/2016
Analyst: R. Pestana
Pipe: 7"

Top Depth: 5797.5'
Bottom Depth: 7829.4'
Run#: 1
Fingers: 56 F

Field: Aliso Canyon Storage Pool
Country: Los Angeles
Tool Type: Image Caliper
.
.

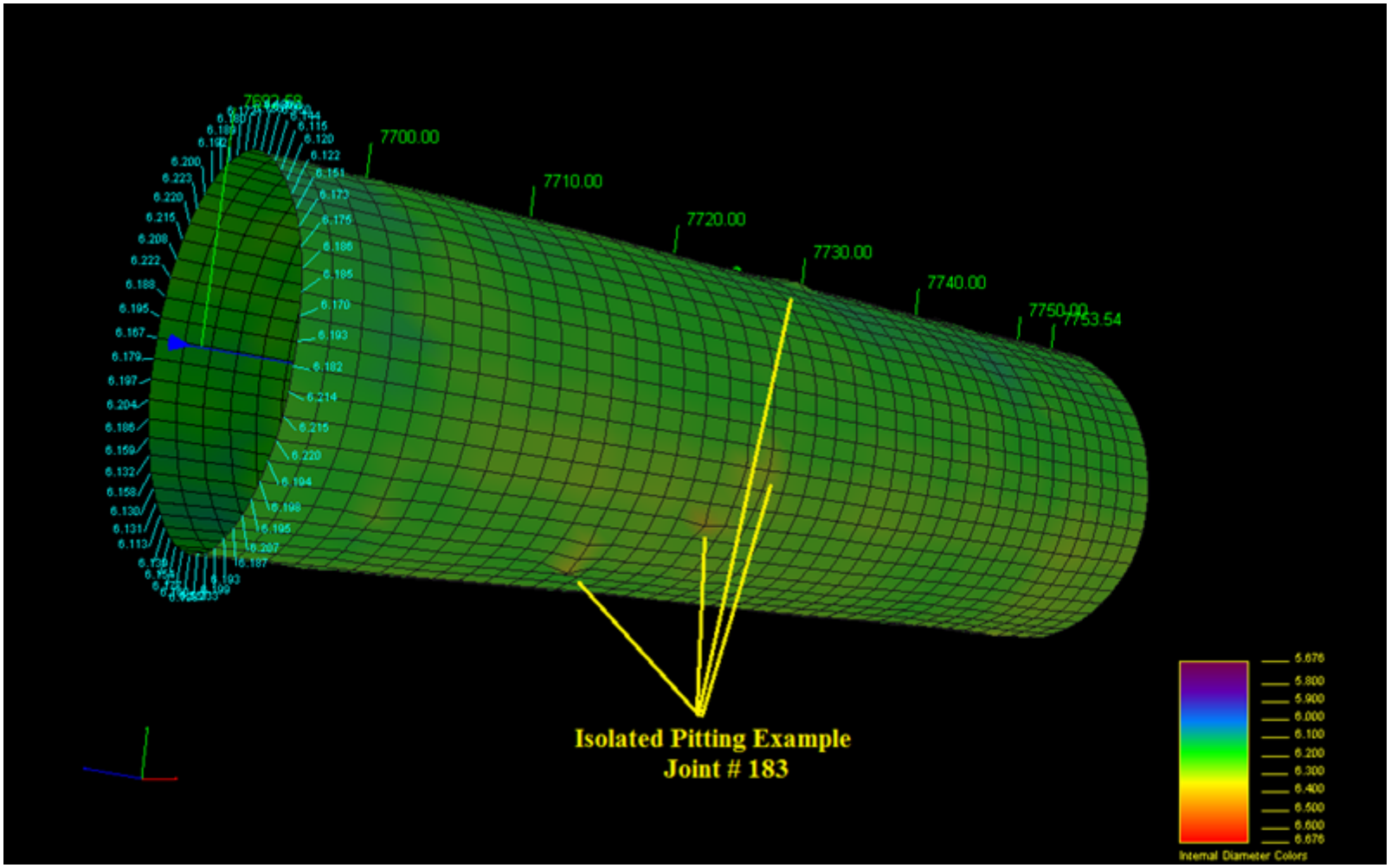

Client: Southern California Gas		Field: Aliso Canyon Storage Pool
Well: Porter # 35	Top Depth: 5797.5'	Country: Los Angeles
Date: 02/26/2016	Bottom Depth: 7829.4'	Tool Type: Image Caliper
Analyst: R. Pestana	Run#: 1	.
Pipe: 7"	# Fingers: 56 F	.

Definition of terms in MIPS Pipe analysis report

Pipe dimensions

Item (no.) In 'pipe-by-pipe' analysis this represents the sequential pipe section number, selected during pipe end detection and editing, and indexed from the bottom up.
Top Body (ft/m) Processed measured depth in m/ft of top of the pipe section.
Bottom Body (ft/m) Processed measured depth in m/ft of bottom of the pipe section.
Body Length (ft/m) Length in m/ft of the pipe section.

Maximum penetration

Maximum penetration [Max.Pen] (ins or mm) Twice radius in inches or mm at maximum penetration of the pipe wall in the pipe section. (Expressed as a diameter - twice radius - for comparison with Nominal and Drift Ids).
Maximum penetration % [Max.Pen (%)] Maximum penetration of the wall in the pipe section, expressed as a percentage relative to the difference between Nominal ID and OD at the maximum penetration point.
Maximum penetration depth [Max.Pen depth] Depth in m/ft of the maximum wall penetration in the pipe section.

Wall Loss

Maximum loss % [Max.Loss (%)] The maximum value of metal loss in the pipe, expressed as the percentage areal loss of wall relative to the outer diameter and nominal diameters. For each sampled depth in the pipe the loss is calculated as:
Percentage wall loss = $(100/n)\ \Sigma\ (Si_2-ID_2)/(OD_2-ID_2)$, where n is the number of caliper arms, Si is twice the radius measured by caliper arm i, ID is the Nominal ID of the pipe.

Restrictions

Minimum radial restriction [Min Res (ins or mm)] Smallest arm reading in inches or mm in the pipe section, (expressed as twice radius for comparison with Nominal and Drift Ids).
Maximum projection [Max Proj (ins or mm)]. Largest projection into the well bore from the pipe wall in ins or mm based on Nominal ID.
Maximum projection % [Max Proj (%)]. Largest projection into the well bore from the pipe wall as a %age of Nominal ID.