5560

State of California
Department of Conservation
Division of Oil, Gas, and Geothermal Resources

No. T _____

MECHANICAL INTEGRITY TEST (MIT)

Operator: So. Cal Gas					Well: Porter 50C
Sec. 27	T. 3N	R. 16W	B.&M. SB	API No.: 037-24337	Field: Aliso Canyon
County: Los Angeles					Witnessed/Reviewed on: C. Knight / 3-8-16

C. Knight, representative of the supervisor, was present from 0930 to 1145.

Also present were: Nick Arbour (InterAct), Duane Prokuski, Greg Fisher

Casing record of the well:

[illegible]"

liner 5 7/8"?
liner 5 1/2"
shoe lining 8749'

sliding sleeve 7140' (open)
WXO sliding sleeve 7011'
- 250' interval for noise log (not including anomaly investigation @ 20')
- 100'/min temp survey speed

The MIT was performed for the purpose of perform temperature survey and noise log with any anamoly detected on temperature survey

☐ The MIT is approved since it indicates that all of the injection fluid is confined to the formations below 7087 feet at this time.

☐ The MIT is not approved due to the following reasons: (specify)

Well: Porter 50C	Date: 3/8/16	Time: 0930
Observed rate: ____ B/D	Meter rate: ____ B/D	Fluid level: none feet
Injection pressure: 1057 psi	MASP:	Pick-up depth: 7137 could not enter liner to p feet
Initial annulus pressure: 1057 psi	Pressure after bleed-off: no bleed off psi	
Casing vented during test (Y/N) No	Survey company: Well Analysis Corp.	

SPINNER COUNTS

DEPTH	COUNTS	RATE	DEPTH	COUNTS	RATE	COMMENTS:

TRACER CASING AND TUBING RATE CHECKS

Interval	Time (sec.)	Rate (B/D)

Background log: NA to NA

COMMENTS: Temp anamalys:
3655 - 4655 4150 peak
water flood inter forence? Water flood is not active or on injection.
Noise log:
Noise noted: 3700-4450 (see noise log)

TOP PERFORATION CHECK

Top perforation depth: 7315-8744 (WWS)	Wait at: ____ for ____ seconds	~~Beads: (Y/N)~~
Casing shoe at:	WSO holes at:	Arrival time: *Calculated* *Actual*

LOG FROM	TO	SLUG @	LOG FROM	TO	SLUG @	COMMENTS:

PACKER CHECK

Packer at: 7087 9 5/8	Wait at: ____ for ____ seconds	~~Beads: (Y/N)~~
Tubing tail at: 7096 Bell Collar	Tubing size: 3 1/2	2nd Packer at: 9 5/8" x 6" 7130 Mandrel:

LOG FROM	TO	SLUG @	LOG FROM	TO	SLUG @	COMMENTS:

COMMENTS: 4150' Temp. anamaly peak
3300 - 4450 temp. anamaly begin - end
4900 - 5020' temp survey leveled off
6380 - 6500' temp survey leveled out @ 158°F

Porter 50 C

Basic Schematic (Full Scale)

Horizontal - Original Hole, 3/8/2016 6:52:09 AM

MD (ftKB)	Vertical schematic (actual)
-3,778.5	
-3,134.2	
-463.3	
-279.2	
-245.4	
-214.6	
-170.6	
-138.5	
-122.7	
-74.8	
-55.1	
-44.0	
-29.2	
-13.8	
-11.8	
-7.2	
0.0	
18.0	
22.0	
31.2	
210.0	
974.1	
1,012.1	
6,967.2	
6,977.7	
7,011.5	
7,046.3	
7,077.8	
7,086.6	
7,095.8	
7,130.6	
7,135.2	
7,141.7	
7,149.6	
7,224.7	
7,305.1	
7,315.3	
8,706.0	
8,749.0	

14-1100

7142

4150

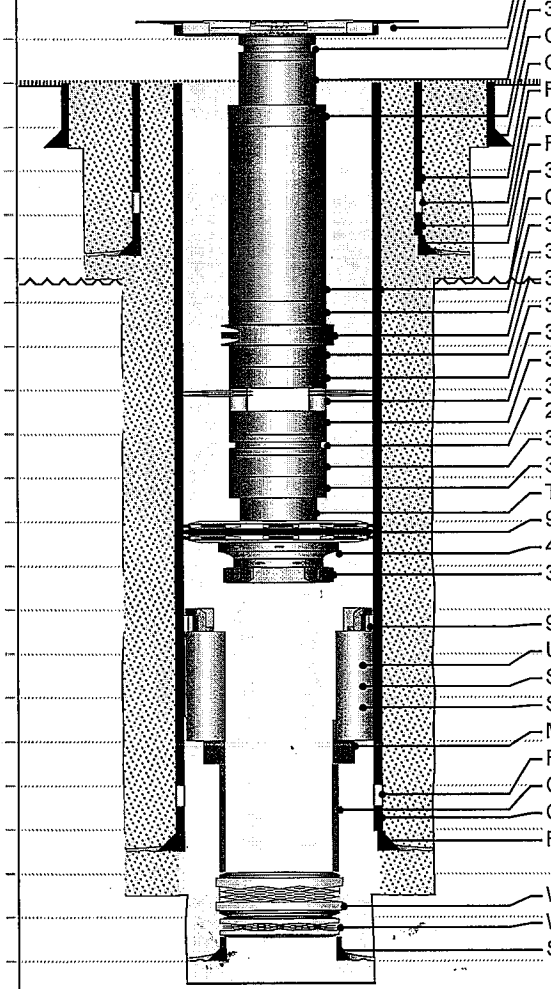

- 10-3/4" x 3-1/2" tubing hanger; 17.2-17.9; 0.70; 10 3/4; 2.992; 1-1
- 3-1/2" L 80 x 12" Fatigue Nipple; 17.9-18.5; 0.61; 3 1/2; 2.992; 1-2
- Tubing; 18.5-24.8; 6.25; 3 1/2; 2.992; 1-3
- 3-1/2" / 9.3 # L 80 8rd x 6' pup jt; 24.8-31.0; 6.25; 4 1/2; 2.992; 1-4
- Casing Joints; 22.0-90.0; 68.00; 20; 19.124; 1-1
- Casing Joints; 22.0-972.5; 950.49; 13 3/8; 12.615; 2-1
- Float Collar; 972.5-974.0; 1.50; 13 3/8; 12.615; 2-2
- Casing Joints; 974.0-1,011.0; 37.01; 13 3/8; 12.615; 2-3
- Float Shoe; 1,011.0-1,012.0; 1.00; 13 3/8; 12.615; 2-4
- 3-1/2" / 9.3 # L 80 8rd tbg; 31.0-6,967.2; 6,936.22; 4 1/2; 2.992; 1-5
- Casing Joints; 22.0-7,224.7; 7,202.63; 9 5/8; 8.681; 3-1
- 3-1/2" / 9.3 # L 80 8rd x 4' pup jt; 6,967.2-6,971.5; 4.27; 4 1/2; 2.992; 1-6
- 3-1/2" 8rd GLM; 6,971.5-6,977.6; 6.14; 5 3/16; 2.992; 1-7
- 3-1/2" / 9.3 # 8rd x 2' pup jt; 6,977.6-6,979.8; 2.20; 4 1/2; 2.992; 1-8
- 3-1/2" / 9.3 # L 80 8rd Tbg; 6,979.8-7,011.5; 31.63; 4 1/2; 2.992; 1-9
- 3-1/2" x 2.81" 'WXO' Sliding Sleeve; 7,011.5-7,014.9; 3.45; 4 1/2; 2.813; 1-10
- 3-1/2" / 9.3 # L 80 8rd tbg; 7,014.9-7,046.3; 31.35; 4 1/2; 2.992; 1-11
- 3-1/2" x 2.750" 'WXN'profile nip w/ 2.666" No-Go; 7,046.3-7,047.6; 1.38; 4 1/2; 2.666; 1-12
- 3-1/2" / 9.3 # L 80 8rd; 7,047.6-7,077.9; 30.23; 4 1/2; 2.992; 1-13
- 3-1/2" /9.3 # L80 8rd ; 7,077.9-7,085.9; 8.07; 4 1/2; 2.992; 1-14
- Tubing; 7,085.9-7,086.7; 0.80; 3 1/2; 2.992; 1-15
- 9-5/8" x 4-12" AS1-X Packer; 7,086.8-7,095.0; 8.28; 8 1/4; 3.984; 1-16
- 4-1/2" EUE x 3-1/2" EUE L80XO; 7,095.0-7,095.8; 0.82; 5 1/2; 2.992; 1-17
- 3-1/2" 8rd Bell Collar; 7,095.8-7,096.3; 0.49; 5 1/8; 2.992; 1-18
- 9-5/8" x 6" Arrow Packer; 7,130.5-7,135.2; 4.73; 8 5/16; 6.000; 4-1
- Upper EXT; 7,135.2-7,139.9; 4.69; 7 5/8; 6.969; 4-2
- Sliding Sleeve; 7,139.9-7,141.7; 1.75; 7 5/8; 6.500; 4-3
- Seal bore; 7,141.6-7,143.1; 1.46; 7 5/8; 6.000; 4-4
- Mill Out EXT; 7,143.1-7,165.1; 22.00; 7; 4.892; 4-5
- Float Collar; 7,224.7-7,226.6; 1.92; 9 5/8; 8.681; 3-2
- Casing Joints; 7,165.1-7,315.1; 150.04; 5 1/2; 4.892; 4-6
- Casing Joints; 7,226.6-7,305.2; 78.64; 9 5/8; 8.681; 3-3
- Float Shoe; 7,305.2-7,307.0; 1.77; 9 5/8; 8.681; 3-4
- WWS; 7,315.2-8,706.1; 1,390.90; 5 7/8; 4.892; 4-7
- WWS; 8,706.0-8,743.7; 37.65; 5 1/2; 4.892; 4-8
- Shoe; 8,743.7-8,749.0; 5.30; 5 1/2; 4.892; 4-9